SPRINT 3

Tasca S3.01. Manipulació de taules

Nivell 1

Exercici 1

La teva tasca és dissenyar i crear una taula anomenada "credit_card" que emmagatzemi detalls crucials sobre les targetes de crèdit. La nova taula ha de ser capaç d'identificar de manera única cada targeta i establir una relació adequada amb les altres dues taules ("transaction" i "company"). Després de crear la taula serà necessari que ingressis la informació del document denominat "dades_introduir_credit". Recorda mostrar el diagrama i realitzar una breu descripció d'aquest.

Creamos la tabla y añadimos los datos. Se selecciona tipo varchar para pan y expiring_date dado que los formatos no son los correctos.

```
CREATE TABLE IF NOT EXISTS credit_card (
    id VARCHAR(100) NOT NULL,
    iban VARCHAR(100),
    pan VARCHAR(100),
    pin INT,
    cvv INT,
    expiring_date varchar (100),
    PRIMARY KEY (id)
);
```

Output

Action Output

#	Time	Action	Message	Duration / Fetch
1	17:08:54	CREATE TABLE IF NOT EXISTS credit_card (id VARCHAR(100) NOT N...	0 row(s) affected	0.062 sec

Al comprobar los datos en el archivo '*datos_introducir_Sprint3_credit.sql*' vemos que algunos campos no tienen el mismo formato para todos los registros, como en el caso del campo pan, y el formato fecha no es el correcto para sql.

Realizamos las modificaciones necesarias:

Primero de todo para poder hacer cambios de toda una columna sin necesidad de WHERE desactivamos safe_updates, al finalizar los cambios los activamos de nuevo.

Se realizan los siguientes cambios:

- En la columna pan se eliminan los espacios entre los números
- La Columna expiring_date como no tenía el formato correcto se tuvo que crear como variable texto, así que primero se cambia a formato fecha con STR_TO_DATE, para luego poder modificar el tipo de variable a DATE.

```
SET SQL_SAFE_UPDATES = 0;

UPDATE credit_card
SET pan = REPLACE (pan, ' ','');

UPDATE credit_card
SET expiring_date = STR_TO_DATE(expiring_date, '%m/%d/%y');

ALTER TABLE credit_card
MODIFY COLUMN expiring_date DATE;

SET SQL_SAFE_UPDATES = 1;
```

Output

Action Output

#	Time	Action	Message	Duration / Fetch
1	18:53:47	SET SQL_SAFE_UPDATES = 0	0 row(s) affected	0.015 sec
2	18:53:49	UPDATE credit_card SET pan = REPLACE (pan, ' ','')	0 row(s) affected Rows matched: 0 Changed: 0 Warnings: 0	0.000 sec
3	18:53:51	UPDATE credit_card SET expiring_date = STR_TO_DATE(expiring_date,...	0 row(s) affected Rows matched: 0 Changed: 0 Warnings: 0	0.015 sec
4	18:53:55	ALTER TABLE credit_card MODIFY COLUMN expiring_date DATE	0 row(s) affected Records: 0 Duplicates: 0 Warnings: 0	0.219 sec
5	18:53:57	SET SQL_SAFE_UPDATES = 1	0 row(s) affected	0.000 sec

Por último, creamos la relación entre la tabla transaction y credit_card mediante la FK credit_card_id.

```
ALTER TABLE transaction
ADD CONSTRAINT fk_credit_card
FOREIGN KEY (credit_card_id) REFERENCES credit_card(id);
```

Output

Action Output

#	Time	Action	Message	Duration / Fetch
1	13:57:14	ALTER TABLE transaction ADD CONSTRAINT fk_credit_card FOREIGN KEY (credit_card_id) REFE...	100000 row(s) affected Records: 100000 Duplicates: 0 Warnings: 0	5.281 sec

Diagrama:

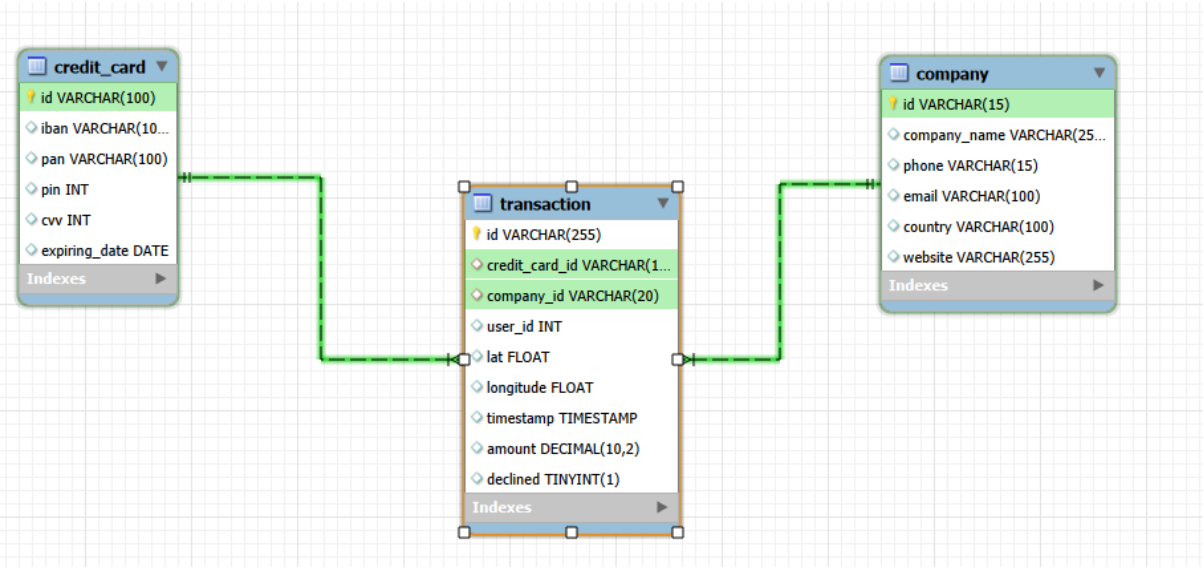

Al incorporar la nueva tabla credit_card, vemos que el nuevo esquema,sigue un modelo en estrella, donde la tabla de transaction es la tabla de hechos y las otras dos tablas actúan como tablas de dimensiones.

La tabla credit_card contiene toda la información detallada sobre tarjetas de crédito, identificadas de forma única mediante la PK id.

La tabla transaction se relaciona con credit_card mediante la FK credit_card_id y con la company mediante la FK company_id.

<u>Exercici 2</u>

El departament de Recursos Humans ha identificat un error en el número de compte associat a la targeta de crèdit amb ID CcU-2938. La informació que ha de mostrar-se per a aquest registre és: TR323456312213576817699999. Recorda mostrar que el canvi es va realitzar.

```
48 •  UPDATE credit_card SET iban ='TR323456312213576817699999'
49    WHERE id = 'CcU-2938';
50
51
52
53
54
```

Output

Action Output

#	Time	Action	Message	Duration / Fetch
1	17:16:42	UPDATE credit_card SET iban ='TR323456312213576817699999' WHE...	1 row(s) affected Rows matched: 1 Changed: 1 Warnings: 0	0.016 sec

```
51 •  SELECT *
52    FROM credit_card
53    WHERE id = 'CcU-2938';
54
```

Result Grid | Filter Rows: | Edit: | Export/Import: | Wrap Cell Content:

id	iban	pan	pin	cvv	expiring_date
CcU-2938	TR3234563122135768176999 99	5424465566813633	3257	984	2022-10-30
NULL	NULL	NULL	NULL	NULL	NULL

credit_card 3 × Apply Revert

Output

Action Output

#	Time	Action	Message	Duration / Fetch
1	17:19:29	SELECT * FROM credit_card WHERE id = 'CcU-2938'	1 row(s) returned	0.000 sec / 0.000 s

Exercici 3

En la taula "transaction" ingressa una nova transacció amb la següent informació:

Id, 108B1D1D-5B23-A76C-55EF-C568E49A99DD

credit_card_id, CcU-9999

company_id, b-9999

user_id, 9999

lat, 829.999

longitude, -117.999

amount, 111.11

declined, 0

Para poder añadir el nuevo registro en transaction necesitemos primero añadir el registro correspondiente en las dos tablas principales: company y credit_card.

```sql
INSERT INTO company (id)
VALUES ('b-9999');
INSERT INTO credit_card (id)
VALUES ('CcU-9999');

INSERT INTO transaction (id, credit_card_id, company_id, user_id, lat, longitude, amount, declined)
VALUES ('108B1D1D-5B23-A76C-55EF-C568E49A99DD','CcU-9999', 'b-9999', '9999', '829.999', '-117.999', '111.11', '0');
```

Output

Action Output

#	Time	Action	Message	Duration / Fetch
1	17:24:27	INSERT INTO company (id) VALUES ('b-9999')	1 row(s) affected	0.016 sec
2	17:24:29	INSERT INTO credit_card (id) VALUES ('CcU-9999')	1 row(s) affected	0.015 sec
3	17:24:32	INSERT INTO transaction (id, credit_card_id, company_id, user_id, lat, lon...	1 row(s) affected	0.016 sec

```sql
SELECT * FROM transaction
WHERE id = '108B1D1D-5B23-A76C-55EF-C568E49A99DD';
```

Result Grid | Filter Rows: | Edit: | Export/Import: | Wrap Cell Content:

id	credit_card_id	company_id	user_id	lat	longitude	timestamp	amount	declined
108B1D1D-5B23-A76C-55EF-C568E49A99DD	CcU-9999	b-9999	9999	829.999	-117.999	NULL	111.11	0
NULL	NULL	NULL	NULL	NULL	NULL	NULL	NULL	NULL

transaction 5 × Apply Revert

Output

Action Output

#	Time	Action	Message	Duration / Fetch
1	17:25:22	SELECT * FROM transaction WHERE id = '108B1D1D-5B23-A76C-55EF-...	1 row(s) returned	0.000 sec / 0.000 s

Exercici 4

Des de recursos humans et sol·liciten eliminar la columna "pan" de la taula credit_card. Recorda mostrar el canvi realitzat.

```sql
ALTER TABLE credit_card
DROP COLUMN pan;
```

Output

Action Output

#	Time	Action	Message	Duration / Fetch
1	17:26:59	ALTER TABLE credit_card DROP COLUMN pan	0 row(s) affected Records: 0 Duplicates: 0 Warnings: 0	0.109 sec

```
95 •  SELECT *
96    FROM credit_card;
97
98
```

Result Grid | Filter Rows: | Edit: | Export/Import: | Wrap Cell Content: | Fetch rows:

id	iban	pin	cvv	expiring_date
CcS-4857	XX4857591835292505850771	1819	467	2025-09-27
CcS-4858	XX8581768137002436094025	3964	817	2028-12-28
CcS-4859	XX7826930491423553609370	4983	277	2026-11-26
CcS-4860	XX5559590368835304645299	6876	661	2027-07-27
CcS-4861	XX2035182877195191627307	5710	398	2026-04-25

credit_card 6 × Apply Revert

Output

Action Output

#	Time	Action	Message	Duration / Fetch
1	17:28:01	SELECT * FROM credit_card	5001 row(s) returned	0.000 sec / 0.000 se

Nivell 2

Exercici 1

Elimina de la taula transaction el registre amb ID 000447FE-B650-4DCF-85DE-C7ED0EE1CAAD de la base de dades.

```
109 •  DELETE FROM transaction
110    WHERE id = '000447FE-B650-4DCF-85DE-C7ED0EE1CAAD';
111
```

Output

Action Output

#	Time	Action	Message	Duration / Fetch
1	17:33:17	DELETE FROM transaction WHERE id = '000447FE-B650-4DCF-85DE-C7...	0 row(s) affected	0.000 sec

```
113 •  SELECT *
114    FROM transaction
115    WHERE id = '000447FE-B650-4DCF-85DE-C7ED0EE1CAAD';
116
```

Result Grid | Filter Rows: | Edit: | Export/Import: | Wrap Cell Content:

id	credit_card_id	company_id	user_id	lat	longitude	timestamp	amount	declined
NULL	NULL	NULL	NULL	NULL	NULL	NULL	NULL	NULL

transaction 8 × Apply Re

Output

Action Output

#	Time	Action	Message	Duration / Fetch
1	17:34:49	SELECT * FROM transaction WHERE id = '000447FE-B650-4DCF-85DE-...	0 row(s) returned	0.000 sec / 0.00

Exercici 2

La secció de màrqueting desitja tenir accés a informació específica per a realitzar abàlisi i estratègies efectives. S'ha sol·licitat crear una vista que proporcioni detalls clau sobre les companyies i les seves transaccions. Serà necessària que creïs una vista anomenada VistaMarketing que contingui la següent informació: Nom de la companyia. Telèfon de contacte. País de residència. Mitjana de compra realitzat per cada companyia. Presenta la vista creada, ordenant les dades de major a menor mitjana de compra.

```sql
CREATE VIEW VistaMarketing AS
SELECT company_name, phone, country, ROUND(AVG(amount),2) AS Media_Compras
FROM company c
JOIN transaction t
ON c.id = t.company_id
WHERE declined = 0
GROUP BY c.id;

SELECT *
FROM vistamarketing
ORDER BY Media Compras DESC;
```

Result Grid | Filter Rows: | Export: | Wrap Cell Content:

company_name	phone	country	Media_Compras
Ac Fermentum Incorporated	06 85 56 52 33	Germany	284.91
Pretium Neque Corp.	07 77 48 55 28	Australia	275.58
Urna Convallis Associates	06 01 24 77 04	United States	273.57
At Associates	09 56 61 10 65	New Zealand	272.74
Metus Vitae Associates	08 25 44 40 66	Australia	270.05

vistamarketing 26 ×

Output

Action Output

#	Time	Action	Message	Duration / Fetch
1	19:10:29	CREATE VIEW VistaMarketing AS SELECT company_name, phone, country, ROUND(...	0 row(s) affected	0.016 sec
2	19:10:41	SELECT * FROM vistamarketing ORDER BY Media_Compras DESC	101 row(s) returned	0.344 sec / 0.000 se

Exercici 3

Filtra la vista VistaMarketing per a mostrar només les companyies que tenen el seu país de residència en "Germany"

```sql
SELECT *
FROM vistamarketing
WHERE country = 'Germany'
ORDER BY Media_Compras DESC;
```

Result Grid | Filter Rows: | Export: | Wrap Cell Content:

company_name	phone	country	Media_Compras
Ac Fermentum Incorporated	06 85 56 52 33	Germany	284.91
Nunc Interdum Incorporated	05 18 15 48 13	Germany	259.32
Convallis In Incorporated	06 66 57 29 50	Germany	257.69
Ac Industries	09 34 65 40 60	Germany	255.17
Rutrum Non Inc.	02 66 31 61 09	Germany	255.14

vistamarketing 27 ×

Output

Action Output

#	Time	Action	Message	Duration / Fetch
1	19:12:21	SELECT * FROM vistamarketing WHERE country = 'Germany' ORDER BY Media_Com...	8 row(s) returned	0.296 sec / 0.000 se

Nivell 3

Exercici 1

La setmana vinent tindràs una nova reunió amb els gerents de màrqueting. Un company del teu equip va realitzar modificacions en la base de dades, però no recorda com les va realitzar. Et demana que l'ajudis a deixar els comandos executats per a obtenir el següent diagrama:

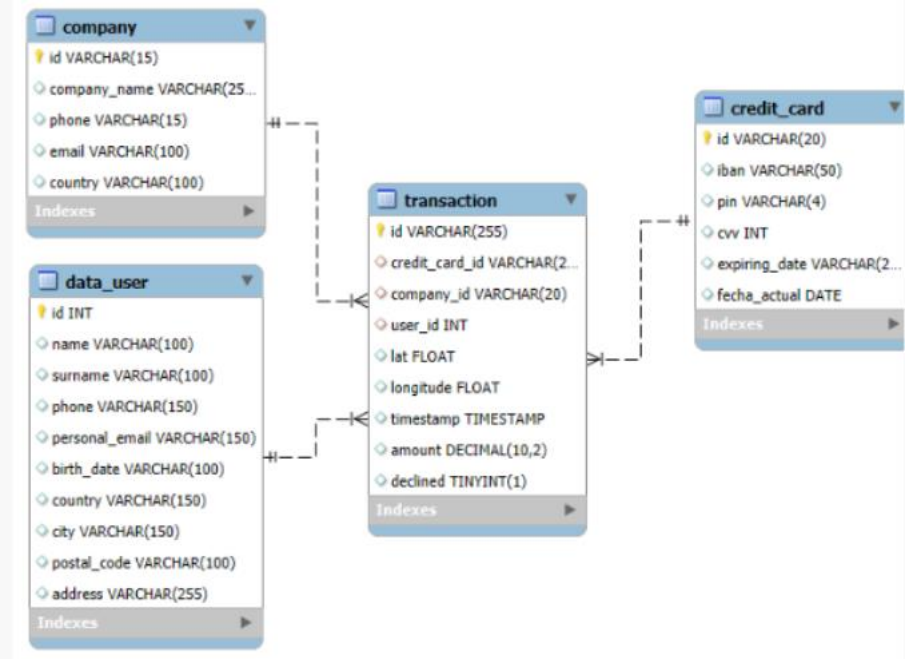

Pasos a seguir

- Abrimos el archivo: '*estructura datos user*', y lo ejecutamos para crear la tabla

```sql
CREATE TABLE IF NOT EXISTS user (
    id CHAR(10) PRIMARY KEY,
    name VARCHAR(100),
    surname VARCHAR(100),
    phone VARCHAR(150),
    email VARCHAR(150),
    birth_date VARCHAR(100),
    country VARCHAR(150),
    city VARCHAR(150),
    postal_code VARCHAR(100),
    address VARCHAR(255)
);
```

Output

Action Output

#	Time	Action	Message	Duration / Fetch
1	19:25:42	CREATE TABLE IF NOT EXISTS user (id CHAR(10) PRIMARY KEY, name VARCHAR(1...	0 row(s) affected	0.250 sec

- Abrimos el archivo: '*datos introducir sprint3 user*', para insertar los datos

```sql
INSERT INTO user (id, name, surname, phone, email, birth_date, country, city, postal_code, address) VALUES (    "154", "Cooper", "Bullock",
INSERT INTO user (id, name, surname, phone, email, birth_date, country, city, postal_code, address) VALUES (    "155", "Joshua", "Russell",
INSERT INTO user (id, name, surname, phone, email, birth_date, country, city, postal_code, address) VALUES (    "156", "Remedios", "Case",
INSERT INTO user (id, name, surname, phone, email, birth_date, country, city, postal_code, address) VALUES (    "157", "Philip", "Carey", "
INSERT INTO user (id, name, surname, phone, email, birth_date, country, city, postal_code, address) VALUES (    "158", "Fatima", "Dyer", "0
INSERT INTO user (id, name, surname, phone, email, birth_date, country, city, postal_code, address) VALUES (    "159", "Kylynn", "Acevedo",
INSERT INTO user (id, name, surname, phone, email, birth_date, country, city, postal_code, address) VALUES (    "160", "Lael", "Moody", "07
INSERT INTO user (id, name, surname, phone, email, birth_date, country, city, postal_code, address) VALUES (    "161", "Nora", "Reeves", "(
INSERT INTO user (id, name, surname, phone, email, birth_date, country, city, postal_code, address) VALUES (    "162", "Francesca", "Sawyer
INSERT INTO user (id, name, surname, phone, email, birth_date, country, city, postal_code, address) VALUES (    "163", "Denton", "Blackburn
INSERT INTO user (id, name, surname, phone, email, birth_date, country, city, postal_code, address) VALUES (    "164", "Preston", "Hood", "
INSERT INTO user (id, name, surname, phone, email, birth_date, country, city, postal_code, address) VALUES (    "165", "Nora", "Cantrell",
INSERT INTO user (id, name, surname, phone, email, birth_date, country, city, postal_code, address) VALUES (    "166", "Matthew", "Woodard"
INSERT INTO user (id, name, surname, phone, email, birth_date, country, city, postal_code, address) VALUES (    "167", "Sheila", "Dickerson
INSERT INTO user (id, name, surname, phone, email, birth_date, country, city, postal_code, address) VALUES (    "168", "Donna", "Rivers", "
INSERT INTO user (id, name, surname, phone, email, birth_date, country, city, postal_code, address) VALUES (    "169", "Linda", "Gaines", "
INSERT INTO user (id, name, surname, phone, email, birth_date, country, city, postal_code, address) VALUES (    "170", "William", "Benjamin
INSERT INTO user (id, name, surname, phone, email, birth_date, country, city, postal_code, address) VALUES (    "171", "Gary", "Robbins", "
```

Output

Action Output

#	Time	Action	Message	Duration / Fetch
4999	19:27:57	INSERT INTO user (id, name, surname, phone, email, birth_date, country, city, postal_c...	1 row(s) affected	0.015 sec
5000	19:27:57	INSERT INTO user (id, name, surname, phone, email, birth_date, country, city, postal_c...	1 row(s) affected	0.000 sec

- Comprobamos que el nombre de la nueva tabla difiere del diagrama creado por el compañero, lo cambiamos

```sql
RENAME TABLE user TO data_user;
```

Output

Action Output

#	Time	Action	Message	Duration / Fetch
1	19:34:42	RENAME TABLE user TO data_user	0 row(s) affected	0.078 sec

- Realizamos un describe de la tabla data_user para comprobar todos los campos y su tipo de variable

```
160 •  DESCRIBE data_user;
161
162
163
```

Result Grid | Filter Rows: | Export: | Wrap Cell Content:

Field	Type	Null	Key	Default	Extra
id	char(10)	NO	PRI	NULL	
name	varchar(100)	YES		NULL	
surname	varchar(100)	YES		NULL	
phone	varchar(150)	YES		NULL	
email	varchar(150)	YES		NULL	
birth_date	varchar(100)	YES		NULL	
country	varchar(150)	YES		NULL	
city	varchar(150)	YES		NULL	
postal_code	varchar(100)	YES		NULL	
address	varchar(255)	YES		NULL	

Result 29 × Read Onl

Output

Action Output

#	Time	Action	Message	Duration / Fetch
1	19:37:39	DESCRIBE data_user	10 row(s) returned	0.016 sec / 0.000 sec

- Realizamos los cambios para que coincidan

```
162 •  ALTER TABLE data_user
163    MODIFY COLUMN id INT;
164
165 •  ALTER TABLE data_user
166    RENAME COLUMN email TO personal_email;
167
```

Output

Action Output

#	Time	Action	Message	Duration / Fetch
1	19:40:45	ALTER TABLE data_user MODIFY COLUMN id INT	5000 row(s) affected Records: 5000 Duplicates: 0 Warnings: 0	0.703 sec
2	19:40:52	ALTER TABLE data_user RENAME COLUMN email TO personal_email	0 row(s) affected Records: 0 Duplicates: 0 Warnings: 0	0.063 sec

```
160 •  DESCRIBE data_user;
```

Result Grid | Filter Rows: | Export: | Wrap Cell Content:

Field	Type	Null	Key	Default	Extra
id	int	NO	PRI	NULL	
name	varchar(100)	YES		NULL	
surname	varchar(100)	YES		NULL	
phone	varchar(150)	YES		NULL	
personal_email	varchar(150)	YES		NULL	
birth_date	varchar(100)	YES		NULL	
country	varchar(150)	YES		NULL	
city	varchar(150)	YES		NULL	
postal_code	varchar(100)	YES		NULL	
address	varchar(255)	YES		NULL	

Result 31 × Read On

Output

Action Output

#	Time	Action	Message	Duration / Fetch
1	19:41:58	DESCRIBE data_user	10 row(s) returned	0.000 sec / 0.000 se

- Realizamos un describe de la tabla company para comprobar todos los campos y su tipo de variable

```
168 •  DESCRIBE Company;
```

Result Grid | Filter Rows: | Export: | Wrap Cell Content:

Field	Type	Null	Key	Default	Extra
id	varchar(15)	NO	PRI	NULL	
company_name	varchar(255)	YES		NULL	
phone	varchar(15)	YES		NULL	
email	varchar(100)	YES		NULL	
country	varchar(100)	YES		NULL	
website	varchar(255)	YES		NULL	

Result 35 × Read Only

Output

Action Output

#	Time	Action	Message	Duration / Fetch
1	19:44:31	DESCRIBE Company	6 row(s) returned	0.016 sec / 0.000 sec

Eliminamos el campo website

```
170 •  ALTER TABLE company
171    DROP COLUMN website;
172 •  DESCRIBE Company;
```

Result Grid | Filter Rows: | Export: | Wrap Cell Content:

Field	Type	Null	Key	Default	Extra
id	varchar(15)	NO	PRI	NULL	
company_name	varchar(255)	YES		NULL	
phone	varchar(15)	YES		NULL	
email	varchar(100)	YES		NULL	
country	varchar(100)	YES		NULL	

Result 37 × Read Only

Output

Action Output

#	Time	Action	Message	Duration / Fetch
1	19:46:43	ALTER TABLE company DROP COLUMN website	0 row(s) affected Records: 0 Duplicates: 0 Warnings: 0	0.156 sec
2	19:47:22	DESCRIBE Company	5 row(s) returned	0.000 sec / 0.000 sec

- Realizamos un describe de la tabla transaction para comprobar todos los campos y su tipo de variable

```
173 •  DESCRIBE transaction;
174
175
```

Result Grid | Filter Rows: | Export: | Wrap Cell Content:

Field	Type	Null	Key	Default	Extra
id	varchar(255)	NO	PRI	NULL	
credit_card_id	varchar(15)	YES	MUL	NULL	
company_id	varchar(20)	YES	MUL	NULL	
user_id	int	YES		NULL	
lat	float	YES		NULL	
longitude	float	YES		NULL	
timestamp	timestamp	YES		NULL	
amount	decimal(10,2)	YES		NULL	
declined	tinyint(1)	YES		NULL	

Result 39 × Read Only

Output

Action Output

#	Time	Action	Message	Duration / Fetch
1	19:49:00	DESCRIBE transaction	9 row(s) returned	0.000 sec / 0.000 sec

Se cambia el tipo de variable de credit_card_id

```
175 •  ALTER TABLE transaction
176    MODIFY COLUMN credit_card_id VARCHAR(20);
177 •  DESCRIBE transaction;
```

Result Grid | Filter Rows: | Export: | Wrap Cell Content:

Field	Type	Null	Key	Default	Extra
id	varchar(255)	NO	PRI	NULL	
credit_card_id	varchar(20)	YES	MUL	NULL	
company_id	varchar(20)	YES	MUL	NULL	
user_id	int	YES		NULL	
lat	float	YES		NULL	
longitude	float	YES		NULL	
timestamp	timestamp	YES		NULL	
amount	decimal(10,2)	YES		NULL	
declined	tinyint(1)	YES		NULL	

Result 40 × Read Only

Output

Action Output

#	Time	Action	Message	Duration / Fetch
1	19:51:57	DESCRIBE transaction	9 row(s) returned	0.016 sec / 0.000 sec

```
179 •  DESCRIBE credit_card;
180
```

Result Grid | Filter Rows: | Export: | Wrap Cell Content:

Field	Type	Null	Key	Default	Extra
id	varchar(100)	NO	PRI	NULL	
iban	varchar(100)	YES		NULL	
pin	int	YES		NULL	
cvv	int	YES		NULL	
expiring_date	date	YES		NULL	

Result 42 × Read Only

Output

Action Output

#	Time	Action	Message	Duration / Fetch
1	19:58:45	DESCRIBE credit_card	5 row(s) returned	0.016 sec / 0.000 sec

Se cambia el tipo varibale de id, iban, pin expiring_date

```
178 •  ALTER TABLE credit_card
179    MODIFY COLUMN id VARCHAR(20);
180 •  ALTER TABLE credit_card
181    MODIFY COLUMN iban VARCHAR(50);
182 •  ALTER TABLE credit_card
183    MODIFY COLUMN pin INT;
184 •  ALTER TABLE credit_card
185    MODIFY COLUMN expiring_date VARCHAR (250);
186
187
188
189
190
```

Output

Action Output

#	Time	Action	Message	Duration / Fetch
1	14:25:41	ALTER TABLE credit_card MODIFY COLUMN expiring_date VARCHAR (250)	5001 row(s) affected Records: 5001 Duplicates: 0 Warnings: 0	0.546 sec

Se incluye nueva columna fecha_actual

```
199 •  ALTER TABLE credit_card
200    ADD fecha_actual DATE;
201 •  DESCRIBE credit_card;
202
```

Result Grid | Filter Rows: | Export: | Wrap Cell Content:

Field	Type	Null	Key	Default	Extra
id	varchar(20)	NO	PRI	NULL	
iban	varchar(50)	YES		NULL	
pin	int	YES		NULL	
cvv	int	YES		NULL	
expiring_date	varchar(250)	YES		NULL	
fecha_actual	date	YES		NULL	

Result 52 × Read Only

Output

Action Output

#	Time	Action	Message	Duration / Fetch
1	14:28:53	ALTER TABLE credit_card ADD fecha_actual DATE	0 row(s) affected Records: 0 Duplicates: 0 Warnings: 0	0.047 sec
2	14:29:04	DESCRIBE credit_card	6 row(s) returned	0.000 sec / 0.000 sec

Por último, creamos la relación entre data_user y transaction, primero debemos introducir el usuario del ejercicio 3 del nivel 1.

```
206 •  INSERT INTO data_user (id)
207    VALUES ('9999');
208
209 •  ALTER TABLE transaction
210    ADD CONSTRAINT fk_data_user
211    FOREIGN KEY (user_id) REFERENCES data_user(id);
```

Output

Action Output

#	Time	Action	Message	Duration / Fetch
1	20:21:18	INSERT INTO data_user (id) VALUES ('9999')	1 row(s) affected	0.016 sec
2	20:21:24	ALTER TABLE transaction ADD CONSTRAINT fk_data_user FOREIGN KEY (user_id) REFERENCES data_user...	100000 row(s) affected Records: 100000 Duplicates: 0 Warnings: 0	4.329 sec

Creamos el Diagrama y comprobamos que es el mismo

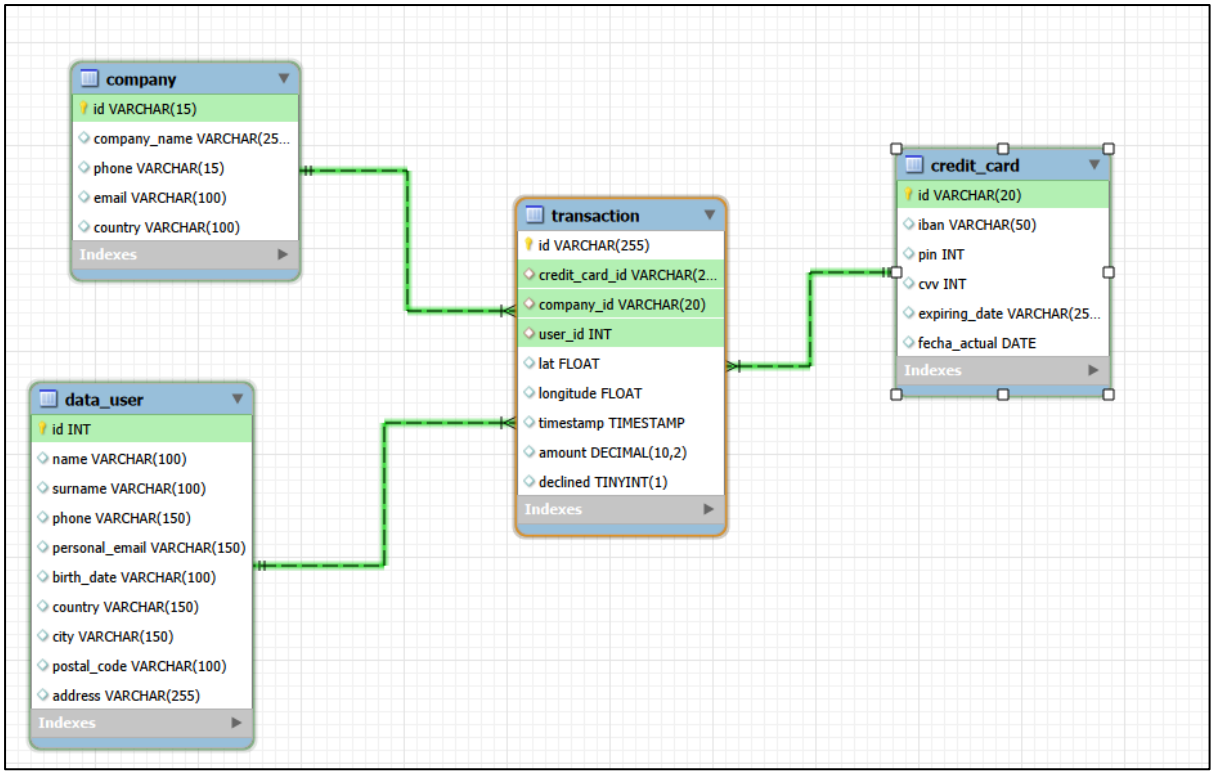
company
id VARCHAR(15)
company_name VARCHAR(25...
phone VARCHAR(15)
email VARCHAR(100)
country VARCHAR(100)
Indexes
transaction
id VARCHAR(255)
credit_card_id VARCHAR(2...
company_id VARCHAR(20)
user_id INT
lat FLOAT
longitude FLOAT
timestamp TIMESTAMP
amount DECIMAL(10,2)
declined TINYINT(1)
Indexes
credit_card
id VARCHAR(20)
iban VARCHAR(50)
pin INT
cvv INT
expiring_date VARCHAR(25...
fecha_actual DATE
Indexes
data_user
id INT
name VARCHAR(100)
surname VARCHAR(100)
phone VARCHAR(150)
personal_email VARCHAR(150)
birth_date VARCHAR(100)
country VARCHAR(150)
city VARCHAR(150)
postal_code VARCHAR(100)
address VARCHAR(255)
Indexes

Exercici 2

L'empresa també us demana crear una vista anomenada "InformeTecnico" que contingui la següent informació:

ID de la transacció

Nom de l'usuari/ària

Cognom de l'usuari/ària

IBAN de la targeta de crèdit usada.

Nom de la companyia de la transacció realitzada.

Assegureu-vos d'incloure informació rellevant de les taules que coneixereu i utilitzeu àlies per canviar de nom columnes segons calgui.

Mostra els resultats de la vista, ordena els resultats de forma descendent en funció de la variable ID de transacció.

Se crea la vista solicitada, añadiendo más información que se considera relevante como:

- Importe de la transacción.
- Fecha de la transacción.
- Nueva columna ‘ transaccion_rechazada’ que indica si o no.

```sql
CREATE VIEW InformeTecnico AS
SELECT
t.id AS Id_transaccion,
d.name AS Nombre_usuario,
d.surname AS Apellido_usuario,
cc.iban AS IBAN_tarjeta,
c.company_name AS Nombre_compañia,
t.amount AS Importe_transaccion,
t.timestamp AS Fecha_hora_transaccion,
CASE
    WHEN t.declined = 1 THEN 'Si'
    ELSE 'No'
END AS Transaccion_rechazada
FROM transaction t
JOIN company c ON t.company_id = c.id
JOIN credit_card cc ON t.credit_card_id = cc.id
JOIN data_user d ON t.user_id = d.id;

SELECT *
FROM InformeTecnico
ORDER BY Id transaccion DESC;
```

Result Grid | Filter Rows: | Export: | Wrap Cell Content: | Fetch rows:

Id_transaccion	Nombre_usuario	Apellido_usuario	IBAN_tarjeta	Nombre_compañia	Importe_transaccion	Fecha_hora_transaccion	Transaccion_rechazada
FFFD31D6-9495-47CE-B54A-7DB8E1CC274B	Bmrgli	Tprvvmrc	XX7948144512112891824909 22	Turpis Company	74.54	2021-08-05 12:26:24	No
FFFCF76D-ECF0-4985-A2D0-B2A7B75998FC	Dfrled	Vilqcjdl	XX6362517016478920366760 34	Amet Nulla Donec Corporation	148.91	2023-06-17 19:10:30	No
FFFC9E8D-27C7-4ADE-98F2-7533EF4DF126	Securp	Faofvqfy	XX1626771433042236314375 67	Nunc Interdum Incorporated	234.22	2019-10-30 02:31:37	No
FFFB270D-F53A-4D5D-9666-E5307C53CC84	Ggzjpa	Ulrzjulh	XX3951142670820199525670 52	Viverra Donec Foundation	349.13	2024-05-13 03:42:03	No
FFF9E3CE-234E-408C-A8EF-F9CAD577224A	Yshimq	Zpsjsleed	XX8845462156537570367941	Convallis In Incorporated	247.39	2022-12-17 20:57:55	No

InformeTecnico 47 | Read Or

Output

Action Output

#	Time	Action	Message	Duration / Fetch
1	21:28:51	CREATE VIEW InformeTecnico AS SELECT t.id AS Id_transaccion, d.name AS Nombre_usuario, d.s...	0 row(s) affected	0.000 sec
2	21:29:04	SELECT * FROM InformeTecnico ORDER BY Id_transaccion DESC	100000 row(s) returned	0.766 sec / 0.094 se